Underwater Light 8 Connector Series Bronze

Data Sheet

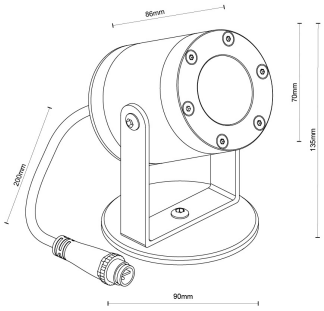

Physical Specification

Body	Quality corrosion resistant brass construction.
Lens	Clear tempered glass.
Reflector	High efficiency, reflective coated polycarbonate. 40ø reflector fitted Standard. 20ø/60ø optional. Refer to Custom Configuration Matrix.
Mounting Options	Surface mount submersed. Fitted mounting base included.
Weight (kg)	2.5
Operating Temperature	-20øC to +50øC
IP Rating	IP68

Electrical Specification and Performance

Input Voltage	24VDC.
Total Load	8 watts. >90 lumens per watt.
Driver	Driver onboard technology.
Remote Power Supply	Gardens at Night fittings should only be connected to approved Gardens at Night 24VDC Constant Voltage (CV) Power Supplies.
Control	Requires clean on/off signal. If switching via automation relays use on/off. Do not use dimming relays as these may leak residual voltage.
Dimming	Triac or Dali available with approved Power Supply and compatible dimming control.
Certifications	E4635

Finishes

BZE Bronze

Installation Instructions

Surface or submersible. Fitted mounting base included.

Refer to Product Page or Technical Resources page to download Installation Sheet.

Gardens at Night is a business of Serrata Group Pty Ltd. Serrata Group does not give any representation or warranty as to the accuracy or completeness of the information included herein and shall not be liable for any action in relevance thereon. Data subject to change.

Underwater Light 8 Connector Series Bronze

Data Sheet

Standard or Custom Configurations

Standard range - locally stocked item
Designed to suit a variety of residential and landscaping applications the Standard range is readily available from your local Distributor. To identify your unique ordering code simply add your chosen finish to the end of the code matrix or copy the standard item code below to order:

GANL-UW8CS-8W-2700-40D-BZE

GANL	- UW8CS	- 4W	- 2700	- 40D	- BZE
GAN PREFIX	SERIES	TOTAL LOAD	LIGHT SOURCE (K)	REFLECTOR	FINISH
GANL	UW8CS	4W	2700	40D	BZE

Custom configuration - commercial specification
If required, we can provide a Custom solution to suit your large residential or commercial project. The following code matrix shows the options available for customisation. For information, speak to your local Commercial Distributor. To assist with specification, simply refer to the GANX item code below:

GANX-UW8CS-8W-X-CV-24VDC-2700-80-40-BZE-X-CL

Stocked Commercial Distributor configuration shown below or Distributor customisation can be configured using this matrix.

GANX	- UW8CS	- 8W	- X	- CV	- 24VDC	- 2700	- 80	- 40	- BZE	- X	- CL
GAN PREFIX	SERIES	TOTAL LOAD	DIMMING	INPUT TYPE	INPUT VOLTAGE	LIGHT SOURCE (K)	CRI	REFLECTOR	FINISH	HEX LOUVRE	LENS
GANX	UW8CS	8W	D	CV	24VDC	2700	80	20D	BZE	HX	CL
			X			3000	90	40D			
			Dimming: Triac or Dali available with approved Power Supply and compatible dimming control			4000	90	60D			

Light Performance

Photometrics	Photometrics Diagram is based on test results as referred. Refer to Technical Resources page to view Photometric Diagram where applicable.
IES	IES Refer to Technical Resources page to download IES file.

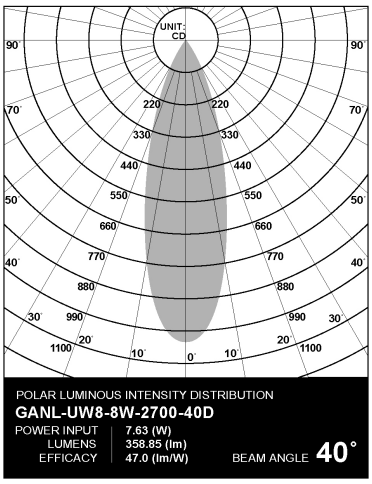

Gardens at Night is a business of Serrata Group Pty Ltd. Serrata Group does not give any representation or warranty as to the accuracy or completeness of the information included herein and shall not be liable for any action in relevance thereon. Data subject to change.

Underwater Light 8 Connector Series Bronze

Data Sheet

Warranty

5 years.
Refer to Technical Resources page to download Warranty Statement.

Wiring Guide

Refer to Technical Resources page to download Wiring Diagram/s.

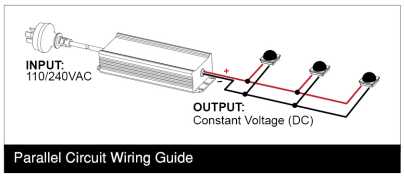

Diagram is a guide only. Wire colours and polarity may change depending on fixture and country.

Accessories

Associated accessories sold separately. Refer to Accessories.

CONNECTOR SERIES 1M EXTENSION

CONNECTOR SERIES 3M EXTENSION

CONNECTOR SERIES 15M FIELD CABLE

CONNECTOR SERIES 30M FIELD CABLE

CONNECTOR SERIES 5M FIELD CABLE

CONNECTOR SERIES 2-WAY JUNCTION

Related Items for Installation

The following items are available to assist with installation and/or warranty compliance.

DC CABLE 2.9MM² 100M

ADHESIVE LINED END CAP 12-4MM 50 PIECES

ADHESIVE LINED TUBE 24-6MM X 110MM 10 PIECES

POWER SUPPLY UNIT 60W

Gardens at Night is a business of Serrata Group Pty Ltd. Serrata Group does not give any representation or warranty as to the accuracy or completeness of the information included herein and shall not be liable for any action in relevance thereon. Data subject to change.

Underwater Light 8 Connector Series Bronze

Data Sheet

Related Fittings in Range

The following fittings are also available in the Underwater Lights range.

UNDERWATER LIGHT 5 CONNECTOR SERIES BRONZE

Gardens at Night is a business of Serrata Group Pty Ltd. Serrata Group does not give any representation or warranty as to the accuracy or completeness of the information included herein and shall not be liable for any action in relevance thereon. Data subject to change.